SM-B200

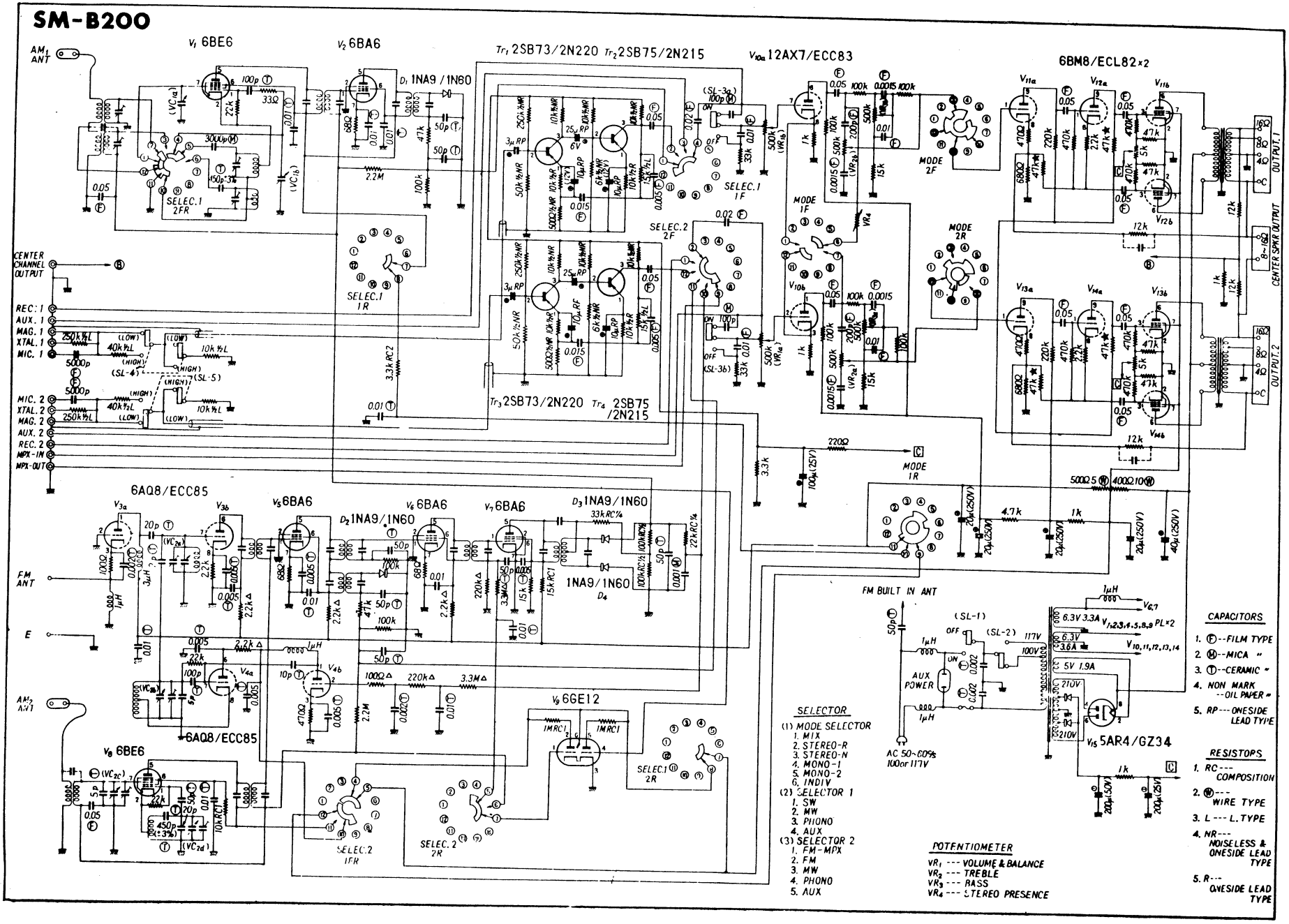
V1 6BE6
V2 6BA6
D1 1NA9 / 1N60
Tr1 2SB73/2N220 Tr2 2SB75/2N215
V10a 12AX7/ECC83
6BM8/ECL82×2
AM1 ANT
CENTER CHANNEL OUTPUT
REC. 1
AUX. 1
MAG. 1
XTAL. 1
MIC. 1
MIC. 2
XTAL. 2
MAG. 2
AUX. 2
REC. 2
MPX-IN
MPX-OUT
SELEC. 1 2FR
SELEC. 1 1R
SELEC. 2 2F
SELEC. 1 1F
MODE 1F
MODE 2F
MODE 2R
MODE 1R
Tr3 2SB73/2N220 Tr4 2SB75/2N215
OUTPUT. 1
OUTPUT. 2
CENTER SPKR OUTPUT
6AQ8/ECC85
V5 6BA6
V6 6BA6
V7 6BA6
D2 1NA9/1N60
D3 1NA9/1N60
D4 1NA9/1N60
FM ANT
E
AM2 ANT
V8 6BE6
V9 6GE12
SELEC. 2 1FR
SELEC. 2 2R
SELEC. 1 2R
FM BUILT IN ANT
AUX POWER
AC 50~60~ 100or117V
V15 5AR4/GZ34
CAPACITORS
1. Ⓕ--FILM TYPE
2. Ⓜ--MICA "
3. Ⓣ--CERAMIC "
4. NON MARK --OIL PAPER "
5. RP---ONESIDE LEAD TYPE
RESISTORS
1. RC--- COMPOSITION
2. Ⓦ--- WIRE TYPE
3. L --- L. TYPE
4. NR--- NOISELESS & ONESIDE LEAD TYPE
5. R--- ONESIDE LEAD TYPE
SELECTOR
(1) MODE SELECTOR
1. MIX
2. STEREO-R
3. STEREO-N
4. MONO-1
5. MONO-2
6. INDIV
(2) SELECTOR 1
1. SW
2. MW
3. PHONO
4. AUX
(3) SELECTOR 2
1. FM-MPX
2. FM
3. MW
4. PHONO
5. AUX
POTENTIOMETER
VR1 --- VOLUME & BALANCE
VR2 --- TREBLE
VR3 --- BASS
VR4 --- STEREO PRESENCE